High Voltage EL Lamp Driver IC

Features

- Processed with HVCMOS® technology
- 2.0 to 9.5V operating supply voltage
- DC to AC conversion
- 200V peak-to-peak typical output voltage
- Large output load capability typically 50nF
- Permits the use of high-resistance elastomeric lamp components
- Adjustable output lamp frequency to control lamp color, lamp life, and power consumption
- Adjustable converter frequency to eliminate harmonics and optimize power consumption
- Enable/disable function
- Low current draw under no load condition
- Very low standby current - 30nA typical

Applications

- Handheld personal computers
- Electronic personal organizers
- GPS units
- Pagers
- Cellular phones
- Portable instrumentation

General Description

The Supertex HV830 is a high-voltage driver designed for driving EL lamps of up to 50nF. EL lamps greater than 50nF can be driven for applications not requiring high brightness. The input supply voltage range is from 2.0 to 9.5V. The device uses a single inductor and a minimum number of passive components. The nominal regulated output voltage that is applied to the EL lamp is ±100V. The chip can be enabled by connecting the resistors on the RSW-Osc and REL-Osc pins to the VDD pin, and disabled when connected to GND.

The HV830 has two internal oscillators, a switching MOSFET and a high-voltage EL lamp driver. The frequency of the switching converter MOSFET is set by an external resistor connected between the RSW-Osc and the VDD pins. The EL lamp driver frequency is set by an external resistor connected between the REL-Osc and the VDD pins. An external inductor is connected between the LX and VDD pins. A 0.01µF to 0.1µF capacitor is connected between the CS pin and the GND. The EL lamp is connected between the VA and VB pins.

The switching MOSFET charges the external inductor and discharges it into the CS capacitor. The voltage at CS will start to increase. Once the voltage at CS reaches a nominal value of 100V, the switching MOSFET is turned OFF to conserve power. The output pins VA and VB are configured as an H-bridge and are switched in opposite states to achieve 200V peak-to-peak across the EL lamp.

Block Diagram

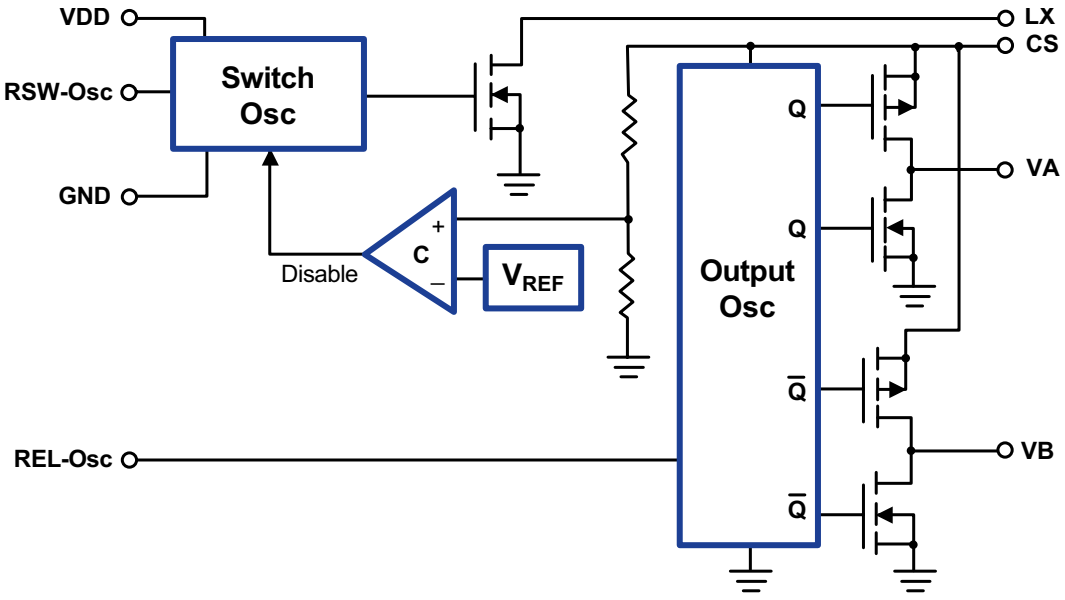

Ordering Information

Part Number	Package	Packing
HV830LG-G	8-Lead SOIC	2500/Reel

-G denotes a lead (Pb)-free / RoHS compliant package

Pin Configuration

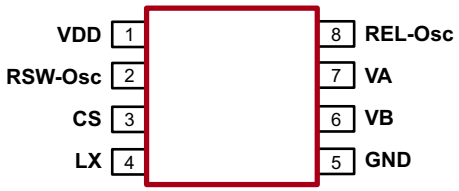

8-Lead SOIC
(top view)

Absolute Maximum Ratings

Parameter	Value
Supply voltage, V_{DD}	-0.5 to +10V
Output voltage, V_{CS}	-0.5 to +120V
Power dissipation	400mW
Storage temperature	-65°C to +150°C
Operating temperature	-25°C to +85°C

Absolute Maximum Ratings are those values beyond which damage to the device may occur. Functional operation under these conditions is not implied. Continuous operation of the device at the absolute rating level may affect device reliability. All voltages are referenced to device ground.

Product Marking

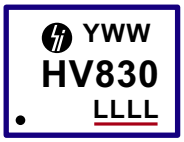

Y = Last Digit of Year Sealed
WW = Week Sealed
L = Lot Number
_____ = "Green" Packaging

Package may or may not include the following marks: Si or

8-Lead SOIC

Typical Thermal Resistance

Package	θ_{ja}
8-Lead SOIC	101°C/W

Recommended Operating Conditions

Sym	Parameter	Min	Typ	Max	Unit	Conditions
V_{DD}	Supply voltage	2.0	-	9.5	V	---
f_{EL}	V_{A-B} output drive frequency	-	-	1.5	KHz	---
T_A	Operating temperature	-25	-	+85	°C	---

DC Electrical Characteristics *(V_{IN} = 3.0V, R_{SW} = 1.0MΩ, R_{EL} = 3.3MΩ, T_A = 25°C unless otherwise specified)*

Sym	Parameter	Min	Typ	Max	Unit	Conditions
$R_{DS(ON)}$	On resistance of switching transistor	-	2.0	4.0	Ω	I = 100mA
V_{CS}	Output voltage - regulation	90	100	110	V	V_{DD} = 2.0V to 9.5V
V_A - V_B	Output peak-to-peak voltage	180	200	220	V	V_{DD} = 2.0V to 9.5V
I_{DDQ}	Quiescent V_{DD} current - disabled	-	30	-	nA	R_{SW-Osc} = Low
I_{DD}	V_{DD} supply current	-	100	150	µA	V_{DD} = 3.0V. See Fig.1
I_{IN}	Input current including inductor current	-	35	40	mA	V_{DD} = 3.0V. See Fig.1
V_{CS}	Output voltage on V_{CS}	-	95	-	V	V_{DD} = 3.0V. See Fig.1
f_{EL}	V_A - V_B output drive frequency	220	250	280	Hz	V_{DD} = 3.0V. See Fig.1
f_{SW}	Inductor switching frequency	55	65	75	KHz	V_{DD} = 3.0V. See Fig.1
D	Switching transistor duty cycle	-	88	-	%	---

Fig.1: Test Circuit, V_{IN} = 3.0V

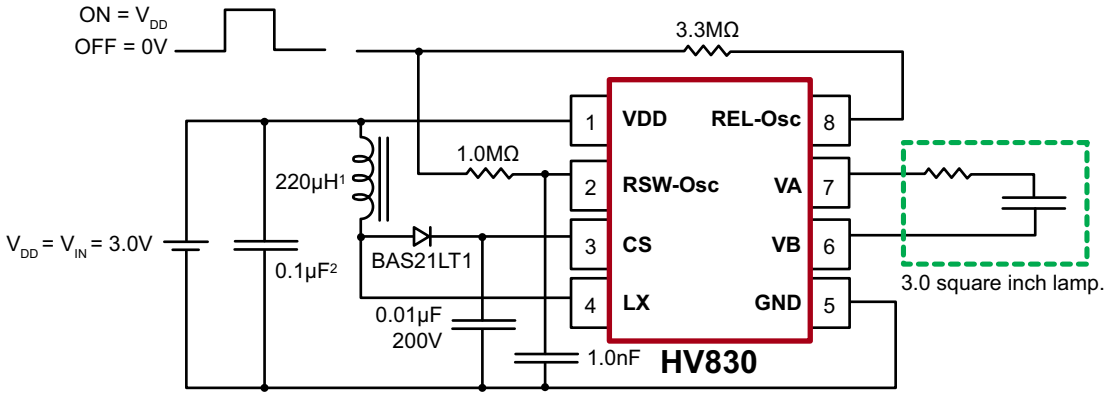

Notes:

1. *Murata part # LQH4N221K04 (DC resistance < 5.4Ω).*
2. *Larger values may be required depending upon supply impedance.*

Enable/Disable Configuration

The HV830 can be easily enabled and disabled via a logic control signal on the R_{SW} and R_{EL} resistors as shown in Fig.2 below. The control signal can be from a microprocessor. R_{SW} and R_{EL} are typically very high values, therefore, only 10's of microamperes will be drawn from the logic signal when it is at a logic high (enable) state. When the microprocessor signal is high the device is enabled and when the signal is low, it is disabled.

Fig. 2: Enable/Disable Configuration

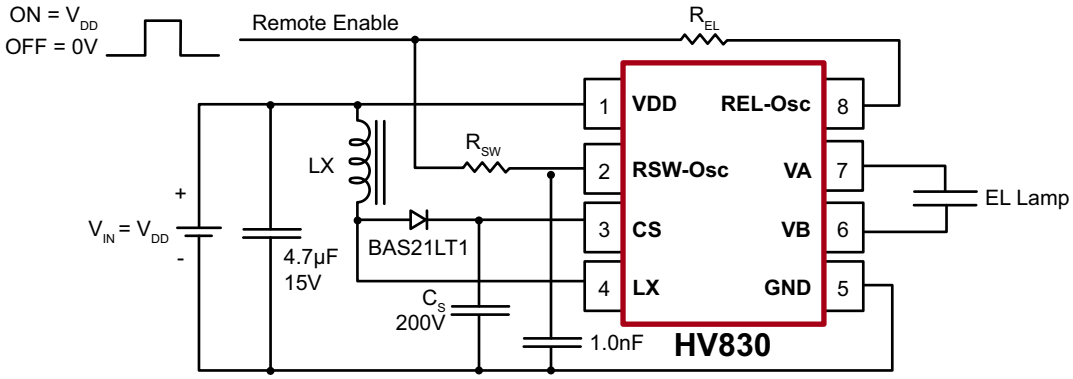

Enable/Disable Table

R_{SW} Resistor	HV830
V_{DD}	Enable
0V	Disable

Fig. 3 Split Supply Configuration

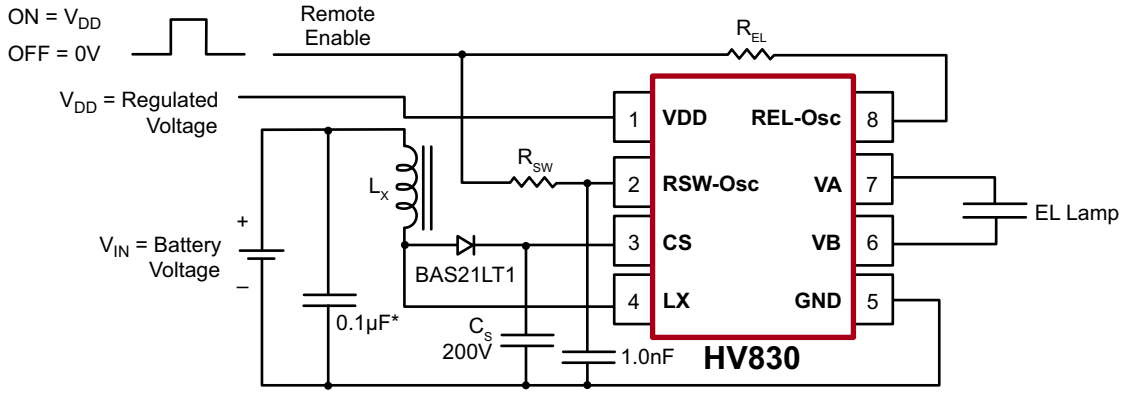

* *Larger values may be required depending upon supply impedance.*

Split Supply Configuration Using a Single Cell (1.5V) Battery

The HV830 can also be used for handheld devices operating from a single cell 1.5V battery where a regulated voltage is available. This is shown in Fig. 3. The regulated voltage can be used to run the internal logic of the HV830. The amount of current necessary to run the internal logic is typically 100µA at a V_{DD} of 3.0V. Therefore, the regulated voltage could easily provide the current without being loaded down. The HV830 used in this configuration can also be enabled/disabled via logic control signal on the R_{SW} and R_{EL} resistors as shown in Fig.2.

Split Supply Configuration for Battery Voltages of Higher than 9.5V

Fig. 3 can also be used with high battery voltages, such as 12V, as long as the input voltage, V_{DD}, to the HV830 device is within its specifications of 2.0V to 9.5V.

External Component Description

External Component	Description
Diode	Fast reverse recovery diode, BAS21LT1 or equivalent.
C_S Capacitor	0.01µF to 0.1µF, 200V capacitor to GND is used to store the energy transferred from the inductor.
R_{EL-Osc}	The EL lamp frequency is controlled via an external R_{EL} resistor connected between REL-Osc and VDD pins of the device. The lamp frequency increases as R_{EL} decreases. As the EL lamp frequency increases, the amount of current drawn from the battery will increase and the output voltage V_{CS} will decrease. The color of the EL lamp is dependent upon its frequency. A 3.3MΩ resistor would provide lamp frequency of 220 to 280Hz. Decreasing the R_{EL-Osc} by a factor of 2 will increase the lamp frequency by a factor of 2.
R_{SW-Osc}	The switching frequency of the converter is controlled via an external resistor, R_{SW} between the RSW-Osc and VDD pins of the device. The switching frequency increases as R_{SW} decreases. With a given inductor, as the switching frequency increases, the amount of current drawn from the battery will decrease and the output voltage, V_{CS}, will also decrease.
C_{SW} Capacitor	A 1nF capacitor is recommended between the RSW-Osc pin and GND when a 0.01µF C_S capacitor is used. This capacitor is used to shunt any switching noise that may couple into the RSW-Osc pin. The C_{SW} capacitor may also be needed when driving large EL lamp due to increase in switching noise. A C_{SW} larger than 1.0nF is not recommended.
L_X Inductor	The inductor L_X is used to boost the low input voltage by inductive flyback. When the internal switch is on, the inductor is being charged. When the internal switch is off, the charge stored in the inductor will be transferred to the high voltage capacitor C_S. The energy stored in the capacitor is connected to the internal H-bridge and therefore to the EL lamp. In general, smaller value inductors, which can handle more current, are more suitable to drive larger size lamps. As the inductor value decreases, the switching frequency of the inductor (controlled by R_{SW}) should be increased to avoid saturation. 220µH Murata inductors with 5.4Ω series DC resistance is typically recommended. For inductors with the same inductance value but with lower series DC resistance, lower R_{SW} value is needed to prevent high current draw and inductor saturation.
Lamp	As the EL lamp size increases, more current will be drawn from the battery to maintain high voltage across the EL lamp. The input power, (V_{IN} x I_{IN}), will also increase. If the input power is greater than the power dissipation of the package (400mW), an external resistor in series with one side of the lamp is recommended to help reduce the package power dissipation.

8-Lead SOIC (Narrow Body) Package Outline (LG)

4.90x3.90mm body, 1.75mm height (max), 1.27mm pitch

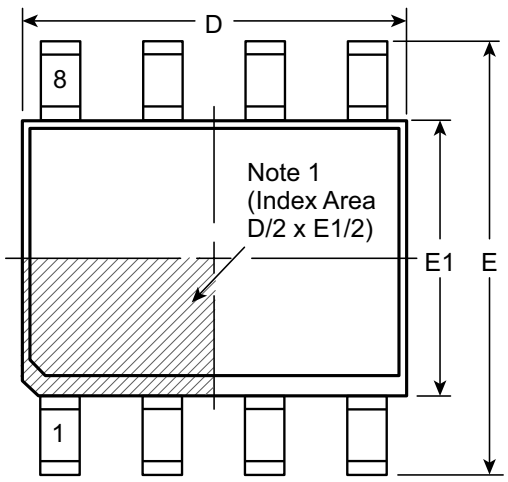

Top View

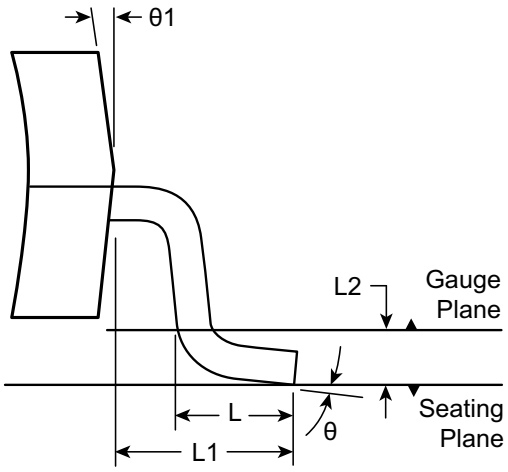

View B

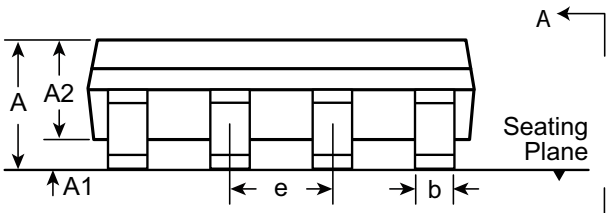

Side View

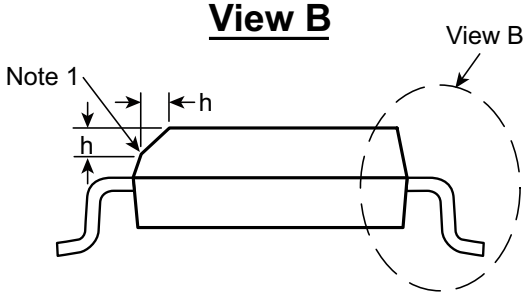

View A-A

Note:

1. *This chamfer feature is optional. A Pin 1 identifier must be located in the index area indicated. The Pin 1 identifier can be: a molded mark/identifier; an embedded metal marker; or a printed indicator.*

Symbol		A	A1	A2	b	D	E	E1	e	h	L	L1	L2	θ	θ1
Dimension (mm)	MIN	1.35*	0.10	1.25	0.31	4.80*	5.80*	3.80*	1.27 BSC	0.25	0.40	1.04 REF	0.25 BSC	0°	5°
	NOM	-	-	-	-	4.90	6.00	3.90		-	-			-	-
	MAX	1.75	0.25	1.65*	0.51	5.00*	6.20*	4.00*		0.50	1.27			8°	15°

JEDEC Registration MS-012, Variation AA, Issue E, Sept. 2005.
** This dimension is not specified in the JEDEC drawing.*
Drawings are not to scale.
***Supertex Doc. #:** DSPD-8SOLGTG, Version I041309.*

(The package drawing(s) in this data sheet may not reflect the most current specifications. For the latest package outline information go to http://www.supertex.com/packaging.html.)

Supertex inc. does not recommend the use of its products in life support applications, and will not knowingly sell them for use in such applications unless it receives an adequate "product liability indemnification insurance agreement." **Supertex inc.** does not assume responsibility for use of devices described, and limits its liability to the replacement of the devices determined defective due to workmanship. No responsibility is assumed for possible omissions and inaccuracies. Circuitry and specifications are subject to change without notice. For the latest product specifications refer to the **Supertex inc.** (website: http//www.supertex.com)

©2013 **Supertex inc.** All rights reserved. Unauthorized use or reproduction is prohibited.

Supertex inc.
1235 Bordeaux Drive, Sunnyvale, CA 94089
Tel: 408-222-8888
www.supertex.com